mm

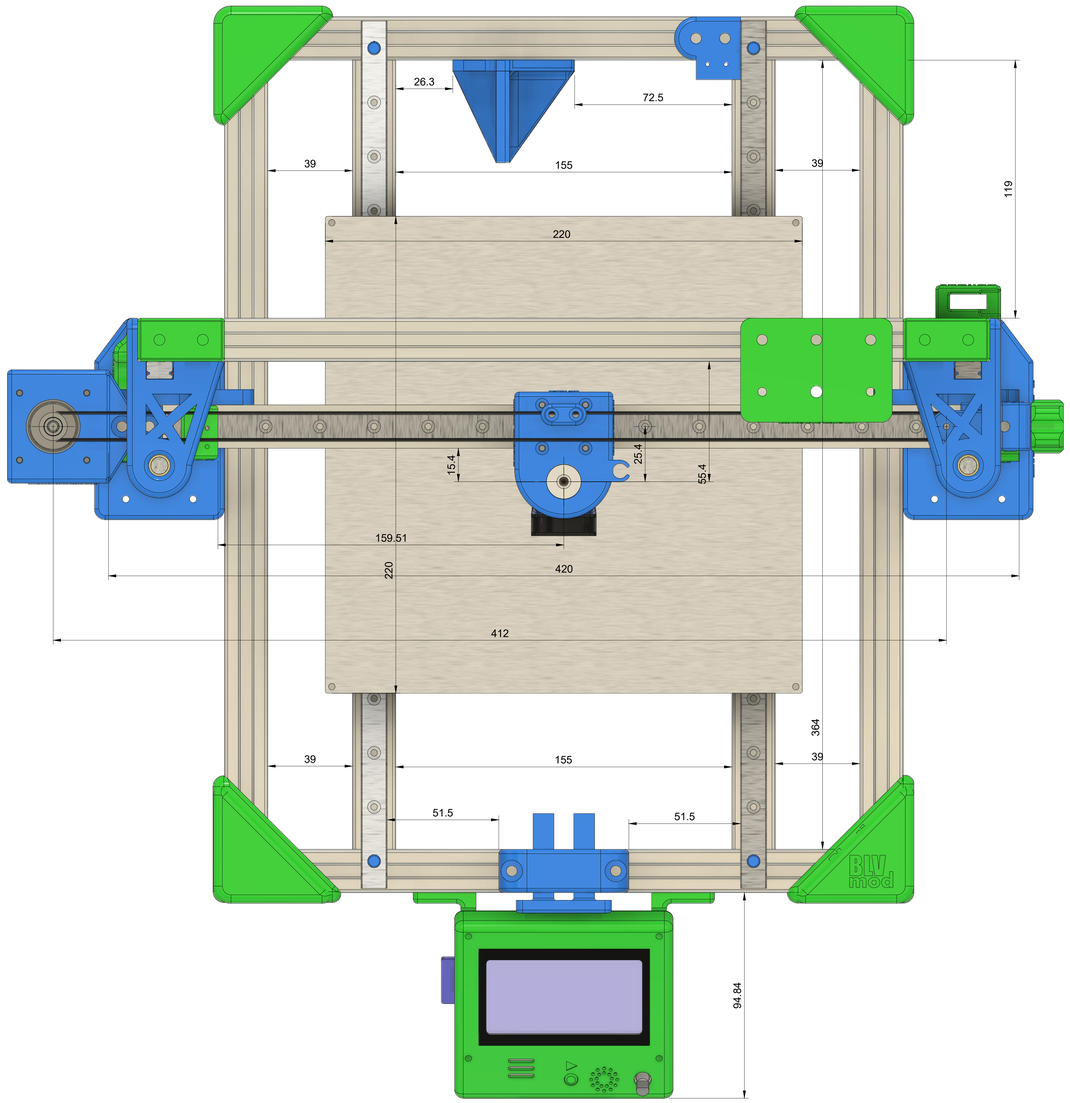
26.3
72.5
39
155
39
119
220
15.4
25.4
55.4
159.51
220
420
412
364
39
155
39
51.5
51.5
94.84

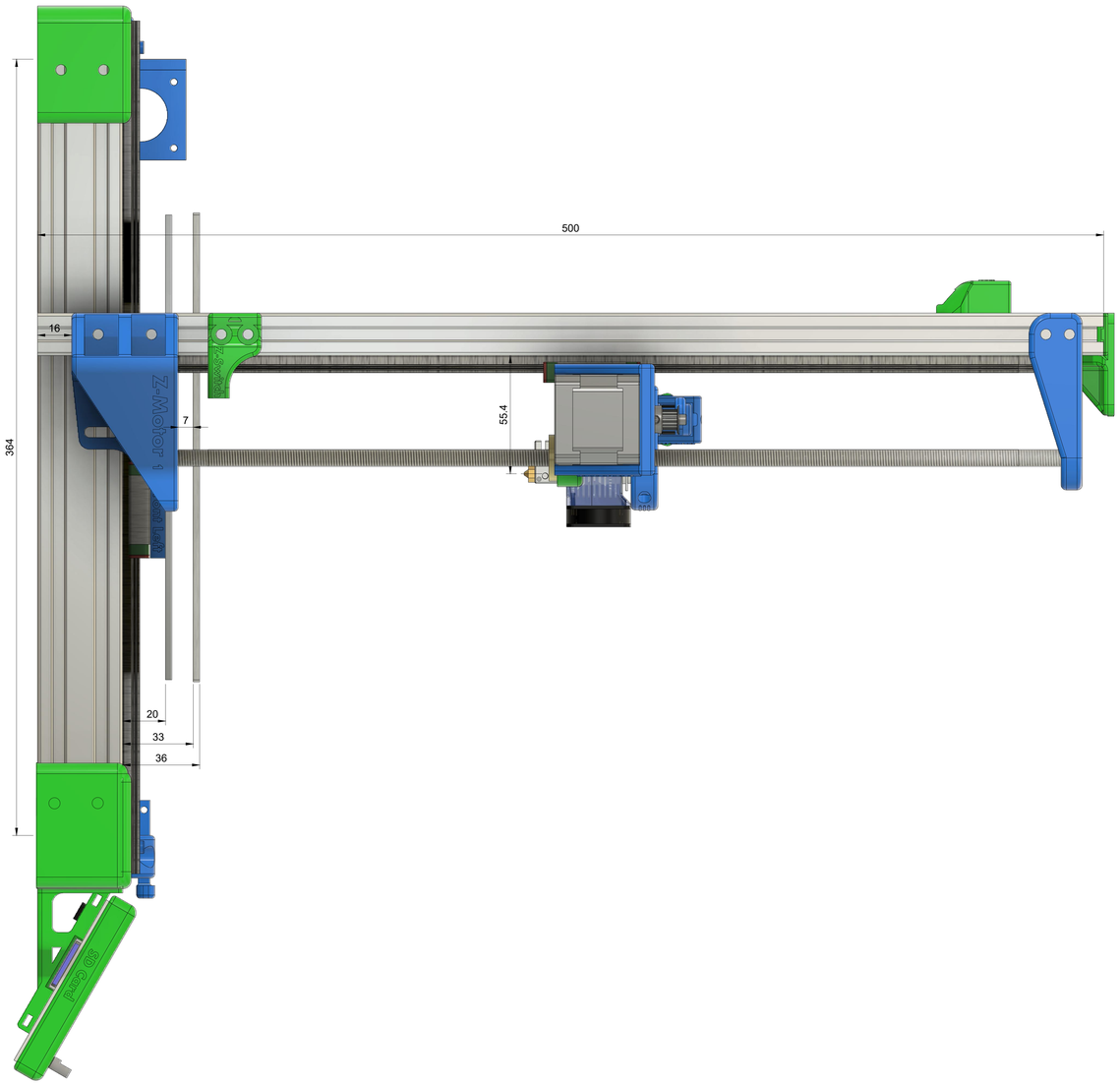
500
16
7
55.4
364
20
33
36